MAT Series

REFRIGERATED COUNTERTOP DISPLAY

MODELS | MAT201L

MAT SERIES – REFRIGERATED COUNTERTOP DISPLAY

Display your grab and go items in style while keeping them chilled.

CABINET CONSTRUCTION

Heavy duty construction includes stainless steel interior with a 4 sides double tempered glass.

REFRIGERATION SYSTEM

Environmentally safe R404A refrigerant. Back side condensing unit positioned for easy maintenance.

Maintains a temperature range form 0°C to 12°C. Includes automatic defrost setting with a ventilated cooling system.

STORAGE

Includes (2) adjustable stainless steel shelves.

MODEL FEATURES

Counter top model that can be move easily in your store.

Sliding doors in the back to help you easily access your products.

SPECIAL FEATURES

- Brilliant internal LED illumination each shelf
- Digital temperature control and display
- Adjustable chrome plated shelves
- 4 sides double glass
- Sliding doors
- Stainless steel
- 2 levels of the bracket to adjust the angle of shelf
- Ventilated cooling system
- Automatic defrost

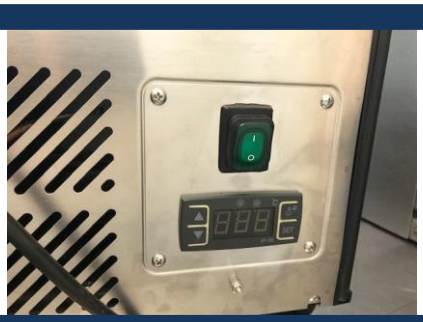

© 2019 Groupe Protec inc.

MAT Series

REFRIGERATED COUNTERTOP DISPLAY

MODELS | MAT201L

TECHNICAL DATA

MODEL	WEIGHT N.W (KG) G.W (KG)	TEMPERATURE	REFRIGERANT	DIMENSIONS-WxDxH Inches mm	CAPACITY L FT^3	AMPS	VOLTAGE
MAT201L	85 87	0°C to 12°C	R134A	48 x 23-1/4 x 27 1217 x 590 x 685	201 7.10	3.26	115V 60 Hz

PLAN VIEW

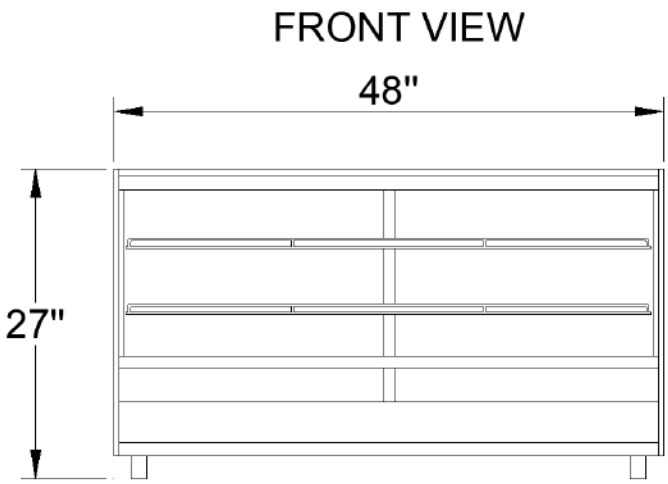

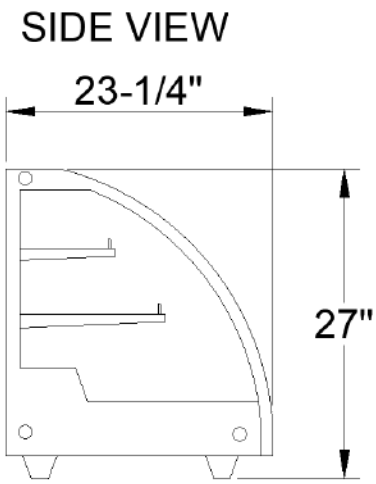

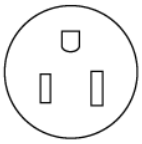

NEMA 5-15P

NOTE : These merchandisers are designed for use in stores when temperature and humidity de not exceed 24 °C and 55% RN. Designed for holding pre-chilled product only.

We reserve the right to change or revise specifications and product design in connection with any feature of our products. Such changes do not entitle the buyer to corresponding changes, improvements, additions, or replacements for equipment previously sold or shipped.